WIRING DIAGRAM FOR GAS INJECTION SYSTEM 1x56 pin.

version: 24.01 and newer

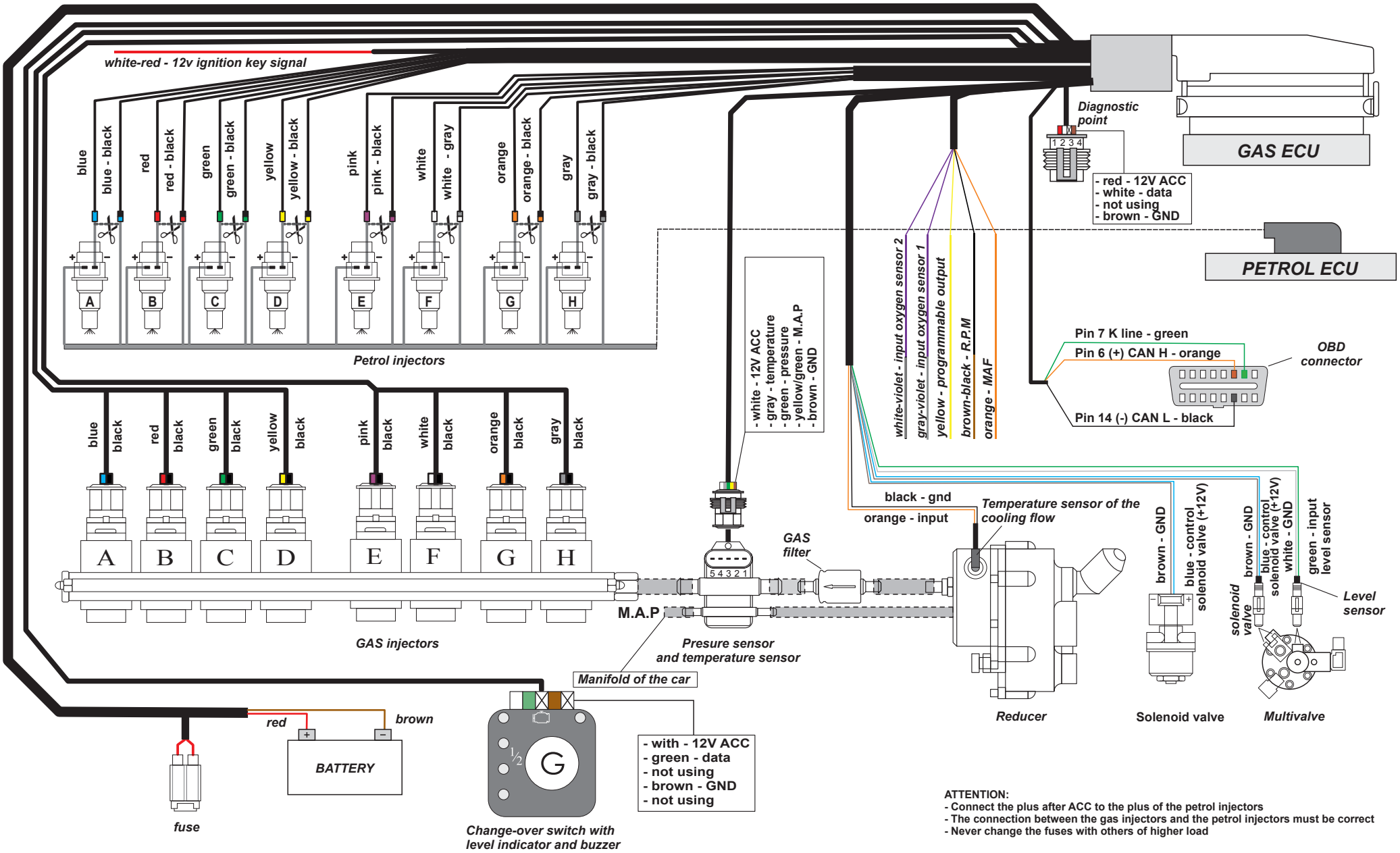

ATTENTION:
- Connect the plus after ACC to the plus of the petrol injectors
- The connection between the gas injectors and the petrol injectors must be correct
- Never change the fuses with others of higher load